TORUS® WATERTUBE

CONDENSING COMMERCIAL BOILERS & WATER HEATERS

300 – 4000 MBH

HEATNET® 3.0

RBI®

RELIABLE. BOLD. INNOVATIVE.

TORUS® WATERTUBE

Torus boilers and water heaters are now designed to fit through a standard 36" door for ease of installation in most mechanical rooms. (300 - 3001)

Optional Rack System (300 – 3001)

*Efficiencies and turndown vary by size.

Torus® watertube boilers and water heaters bring next level performance in a small compact footprint to today's applications.

The RBI tradition of high quality, performance equipment in a user-friendly design continues with Torus.

Incorporating all industry-proven components including HeatNet 3.0 touchscreen cascade control, Tru-Flow fuel/air coupling system with up to 10:1 turndown* and capacities up to 4000 MBH (88 – 1172kW). Torus has the solution for all commercial installations.

The Torus uses a pressure driven mixing system with no moving parts to provide a reliable turndown, without lowering the CO2% while avoiding nuisance ignition lockouts.

Features and Benefits

- 300 – 4000 MBH (88 – 1172 kW)
- Up to 98.7% AHRI Boiler Thermal Efficiency*
- Up to 99.5% AHRI Water Heater Thermal Efficiency*
- Energy Star Certified (Boiler Only 300 – 2000)
- Full Modulation (up to 10:1 turndown*)
- 4 Pass Double-Row Watertube Heat Exchanger (160 psi/ ASME (H & HLW) Stamp)
- 316L Stainless Steel Watertube Heat Exchanger
- Variable Volume, Full Flow and Primary/Secondary
- Sika Flow Switch (Flow Sensor Optional)
- HeatNet 3.0 Integrated Control Platform
- Touchscreen Programming and Diagnostics
- Modbus, LonWorks and BACnet BMS Integration
- Low NOx and CO
- Easy Maintenance and Installation
- Concentric Vent (Sidewall and Vertical 300 – 500 MBH)
- Category II and IV (up to 160') (100' 300 – 3001/ 160' 4000 Only)
- PVC/CPVC, Polypropylene and Stainless Steel Vent Approved
- Warranty (Heat Exchanger): 10-year Boiler; 5-year Water Heater
- NG/LP/Dual Fuel
- Outdoor Installation
- Top Inlet/Outlet Water Connections (Optional with Indoor 4000 Only)

ENERGY STAR
Boiler Only
300 – 2000

AHRI CERTIFIED® www.ahridirectory.org

C US NSF/ANSI 372

Heat Exchanger Performance

Torus heat exchangers are designed for optimum performance and durability. Made from an industrial quality 316L stainless steel Torus heat exchangers are reliable and robust while being very resistant to both thermal shock and acidic condensate.
A unique 4-pass design works in concert with a new multichannel manifold and increased tube diameters resulting in ultra-high efficiency with very low pressure drop.
Torus heat exchangers are manufactured with an industrial quality 316L stainless steel through a process called tube hydroforming. Tube hydroforming allows the shaping of stainless steel tubes that are not only stronger and lighter but also have a higher quality surface than competitive heat exchangers maximizing both performance and durability in a compact design.
Hydroforming insures a uniform and consistent gap between the tubes facilitating consistent exhaust gas circulation and uniform heat transfer throughout the entire heat exchanger.

4-Pass Watertube Heat Exchanger

Torus' Bluejet® burner offers industry leading modulation capacity, flame retention and combustion quality. Whether natural gas or LP gas, BlueJet's low NOx design works in perfect concert with our Tru-Flow fuel/air system providing consistent reliable operation.
Torus heat exchangers use a 4-pass system for maximum efficiency. The unique path of water throughout the heat exchanger is designed to absorb as much heat energy as possible.
Pass 1: Return water passes through the first set of inner tubes absorbing residual heat energy.
Pass 2: Water passes through the exhaust gas chamber
Pass 3: Outer tubes of the combustion chamber
Pass 4: Supply water distribution final pass through the inner tubes of the combustion chamberrus' Bluejet

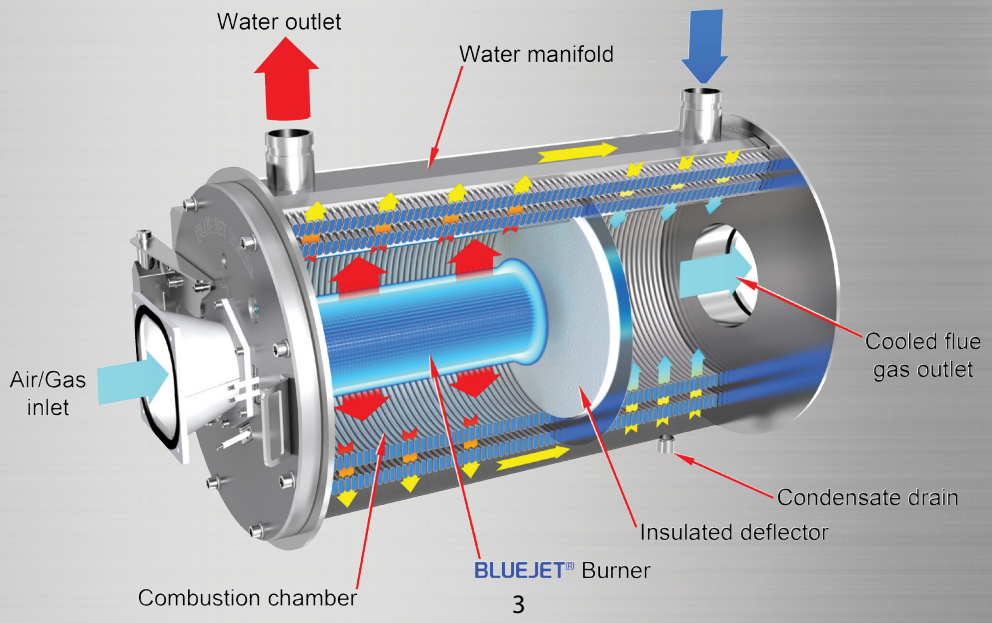

RBI®
RELIABLE. BOLD. INNOVATIVE.

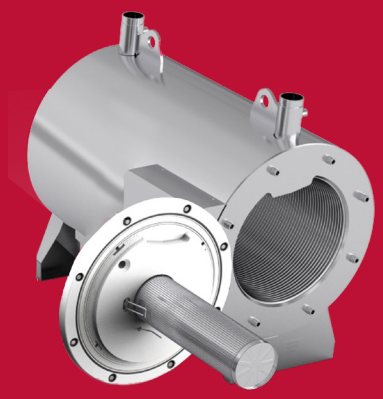

Ease of Service

Torus just may be the easiest piece of equipment ever to service. The burner door system provides easy access to both the burner and heat exchanger tube bundle, offering full access to the combustion chamber for annual inspection and service.

Tru-Flow Air/Fuel

Tru-Flow is instantly responsive and completely adaptable. The system reacts to changes in air and instantly compensates fuel supply by adjusting input to maintain a constant air/fuel mixture across the modulation range, while increasing combustion efficiency and maintaining low emissions. Torus boilers are capable of reliable full-fire performance at just 4" of gas pressure.

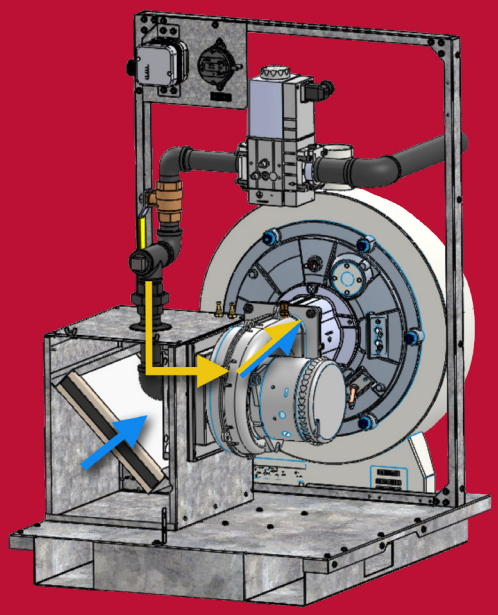

SIKA Vortex Flow Sensor

Torus boilers come standard with a Sika flow switch. Units are also available with an optional SIKA vortex flow sensor mounted in a by-pass configuration and mapped to indicate the boiler flow in (gpm). The SIKA flow sensor utilizes vortex technology which is then converted to an electrical signal sent directly to the HeatNet Boiler Management System for real time flow annunciation. The SIKA flow sensor is fully adjustable throughout the operating range.

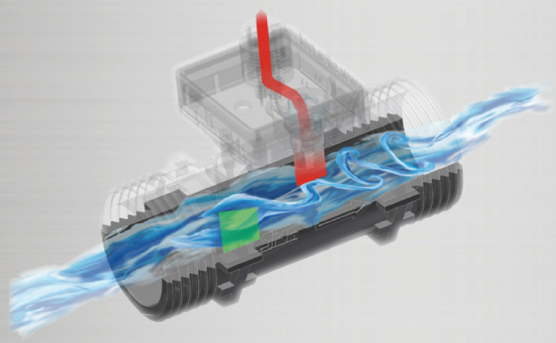

Efficiency

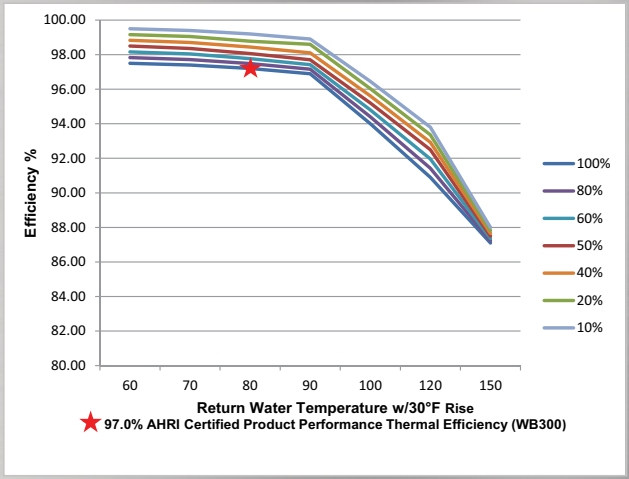

HEATNET® 3.0

HeatNet.net

Every premium efficiency boiler manufactured by the Mestek Boiler Group is integrated with HeatNet 3.0® – an innovative, digital Boiler Management System that provides consistency and feedback through digital communication. By continuously monitoring several system characteristics, HeatNet 3.0 modulates boiler firing rates to maximize turndown ratios and maintain peak efficiency – no matter the load.

HeatNet 3.0 doesn't just benefit stand-alone boilers; it is a valuable and cost-saving tool in operating a multi-boiler Master/Member network of up to 16 boilers, including mixed-size units. By functioning as a boiler management system, HeatNet 3.0 can incorporate a mixture of condensing boilers and non-condensing boilers to eliminate costly third-party, wall-mounted boiler control platforms.

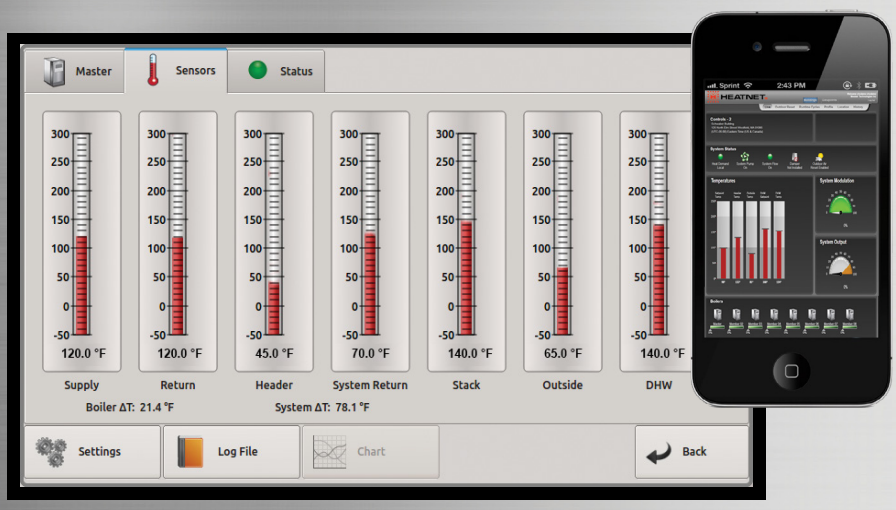

- Digital Touch Screen Programming
- Lead/Lag Cascade (16 Units)
- Mixed-Size Unit Communication
- Adaptive Modulation
- Circular Pump/VFD/Valve Control
- BMS Integration
- Freeze Protection & Delta T Monitoring
- Hybrid/base Load Capability
- Priority Boiler Control
- Domestic Hot Water Communication
- Web-Based Remote Monitoring/Dashboard
- Diagnostics and Troubleshooting
- Set Points
- Exclusive Remote Monitoring Capability with HeatNet Online

HeatNet Online:

Remote Monitoring, Boiler Performance Control & System Protection

HeatNet Online allows for real-time remote monitoring of boiler temperatures, limit circuit inputs, diagnostics and overall system performance.

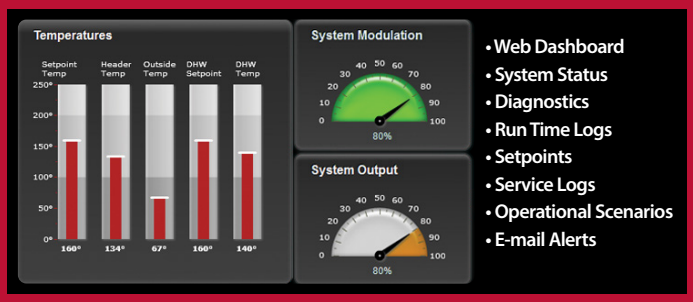

- Web Dashboard
- System Status
- Diagnostics
- Run Time Logs
- Setpoints
- Service Logs
- Operational Scenarios
- E-mail Alerts

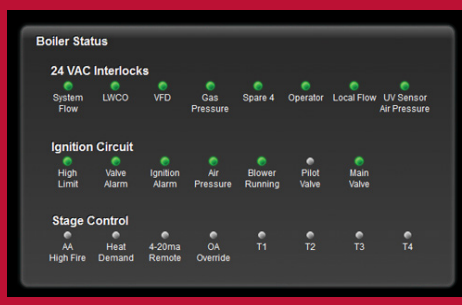

Troubleshoot From Anywhere

Building Dashboard

- Supports Multiple Systems
- "Live" Data Updated Every 60 Seconds
- Setpoint, Header, DHW Set, DHW (if enabled) Stack (if detected)
- System Modulation, System Output
- Visual Cues for Firing Boilers

System History

- Visual Trending
  - Header Temp
  - Modulation
  - DHW Temp
  - Setpoints (Operating, DHW)
- "Zoom" Charting Scales from Hour to Minute Interval
- Log Entries
  - Full Log Event
    - Event Description
    - System Detail
  - No 1000 Log Limit

Service Log History

- Individual Entries Can Be Stand Alone or Attached to Warnings, Faults
- File Upload
  - Allows Technicians to Upload Pictures From Phone
- Dynamic Link
  - Links to Product Specific Support Literature

Product Dimensions
WB/WW 300 - 1000

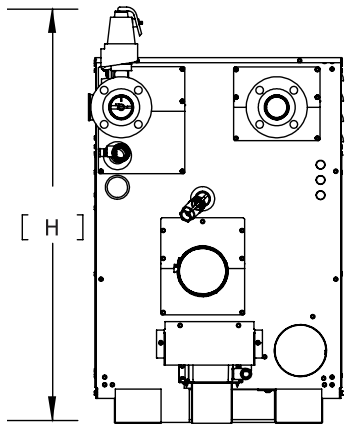

REAR VIEW

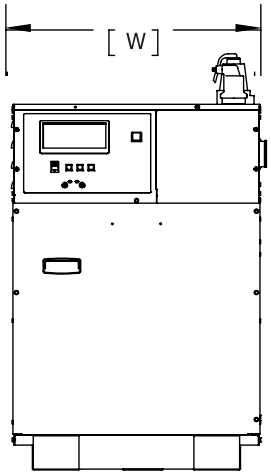

FRONT VIEW

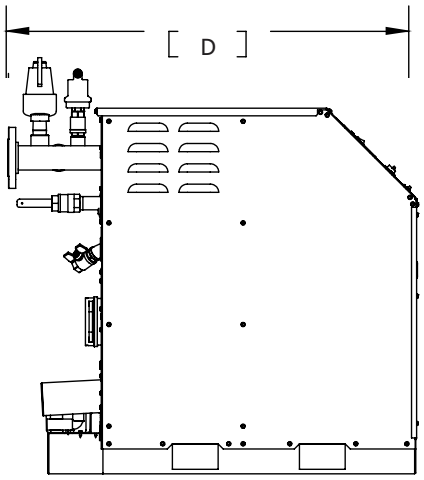

LEFT SIDE VIEW

	300	350	400	500	650	800	1000
Dimensions							
Height (in)	41.13	41.13	41.13	41.13	41.13	41.13	41.13
Width (in)	25.32	25.32	25.32	25.32	25.32	25.32	25.32
Depth (in)	40.50	40.50	40.50	41.94	49.52	52.39	57.14
Operating Weight (lbs.)	407	407	407	426	486	524	607
Shipping Weight (lbs.)	519	519	519	537	598	635	746
Metric Dimensions							
Height (mm)	1045	1045	1045	1045	1045	1045	1045
Width (mm)	643	643	643	643	643	643	643
Depth (mm)	1029	1029	1029	1065	1258	1331	1451
Operating Weight (kg)	185	185	185	193	221	235	275
Shipping Weight (kg)	235	235	235	244	271	288	338

TORUS® WATERTUBE Product Dimensions WB/WW 1251 - 4000

Torus 1251 - 3001

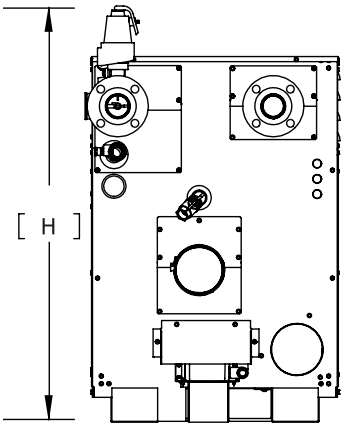

REAR VIEW

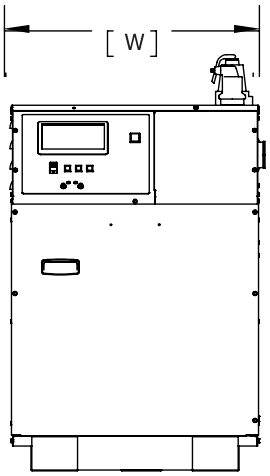

FRONT VIEW

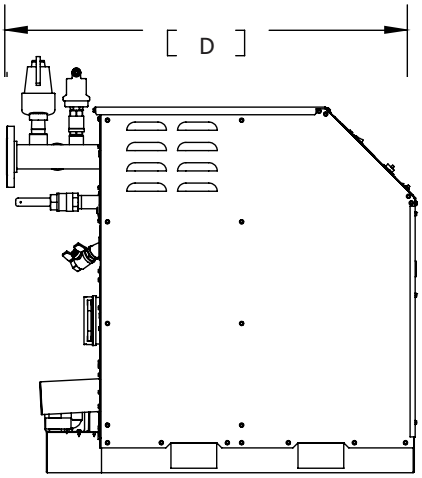

LEFT SIDE VIEW

Torus 4000

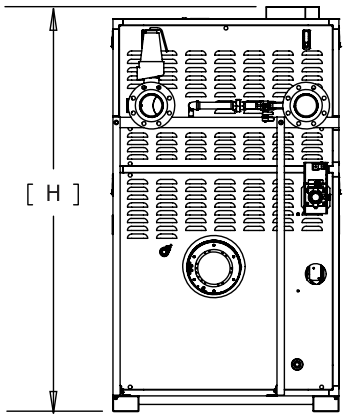

REAR VIEW

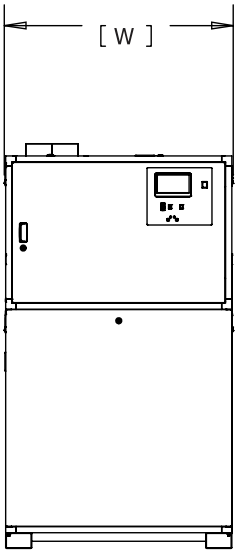

FRONT VIEW

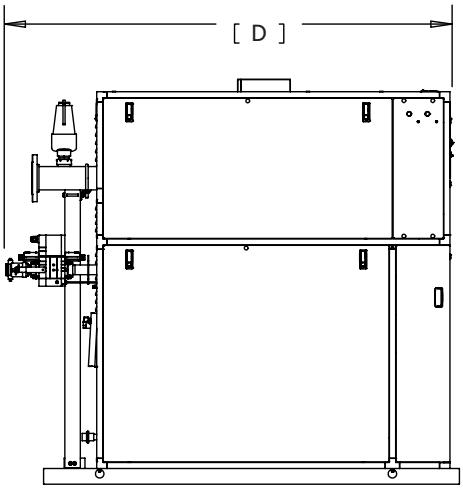

LEFT SIDE VIEW

	1251	1501	1751	2001	2501	3001	4000
Dimensions							
Height (in)	41.16	48.1	54.54	54.54	55.79	55.79	77 27/32
Width (in)	25.32	33.5	33.5	33.5	33.5	33.5	44 1/16
Depth (in)	65.54	68	73	73	81.78	81.78	96
Operating Weight (lbs.)	815	980	1285	1285	1565	1565	2866
Shipping Weight (lbs.)	870	1025	1335	1335	1590	1590	2983
Metric Dimensions							
Height (mm)	1045	1222	1385	1385	1417	1417	1977
Width (mm)	643	851	851	851	851	851	1119
Depth (mm)	1665	1724	1847	1847	2077	2077	2500
Operating Weight (kg)	370	445	583	583	710	710	1300
Shipping Weight (kg)	390	465	605	605	721	721	1353

RBI® RELIABLE. BOLD. INNOVATIVE.

TORUS® WATERTUBE

Product Specification
WB/WW 300 - 1000

	300	350	400	500	650	800	1000
Ratings and Capacities							
Input BTU/HR - (WB/WW)	300,000	349,000	399,000	500,000	650,000	800,000	999,000
Output BTU/HR - Boiler - (WB)	291,000	337,483	385,035	482,000	625,950	768,800	959,040
AHRI Thermal Efficiency - Boiler (%)	97	96.7	96.5	96.4	96.3	96.1	96
Water Heater Hourly Recovery Capacity (GPH @ 60 deg f)	588	677	782	960	1262	1553	1939
Water Heater Hourly Recovery Capacity (GPH @ 100 deg f)	353	406	469	576	757	932	1163
Water Heater Hourly Recovery Capacity (GPH @ 140 deg f)	252	290	335	412	541	665	831
Turn Down (NG)	8:1	9:1	10:1	10:1	10:1	10:1	10:1
Turn Down (LP)	8:1	8:1	8:1	8:1	8:1	8:1	8:1
HP - Boiler	8.69	10.08	11.50	14.40	18.70	22.97	28.65
Fuel Type	NG/LP/Dual Fuel	NG/LP/Dual Fuel	NG/LP/Dual Fuel	NG/LP/Dual Fuel	NG/LP/Dual Fuel	NG/LP/Dual Fuel	NG/LP/Dual Fuel
Category	CAT II/IV	CAT II/IV	CAT II/IV	CAT II/IV	CAT II/IV	CAT II/IV	CAT II/IV
Water Volume (gal)	3.8	3.8	3.8	4.2	5.6	6.6	8.1
Design Data - (Max working Press - psig)	160	160	160	160	160	160	160
Min water pressure (psi)	20	20	20	20	20	20	20
ASME Sect IV Fireside Htg Surface (sq-ft)	34.8	34.8	34.8	39.1	52.2	60.9	75.4
ASME Sect IV Waterside Htg Surface (sq-ft)	31.5	31.5	31.5	35.44	47.25	55.12	68.24
Electrical (Standard)	120V-1ph	120V-1ph	120V-1ph	120V-1ph	120V-1ph	120V - 1ph	120V - 1ph
FLA (amps)	12	12	12	12	12	12	12
Min. Gas Pressure (w.c.) N/G	4	4	4	4	4	4	4
Min. Gas Pressure (w.c.) LP	4	4	4	4	4	4	4
Max. Gas Pressure (w.c.)	14	14	14	14	14	14	14
Max Vent (Equiv. ft)	100	100	100	100	100	100	100
Max Combustion Air (Equiv. ft)	100	100	100	100	100	100	100
Trim							
Number of Relief Valves	1	1	1	1	1	1	1
Relief Valve Pressure Rating (PSI) (WB/WW)	50/125	50/125	50/125	50/125	50/125	50/125	50/125
Inlet Water Connection (in)	2	2	2	2	2	2	2 1/2
Outlet Water Connection (in)	2	2	2	2	2	2	2 1/2
Gas Connection - NG (in)	1"	1"	1"	1"	1-1/4"	1-1/4"	1-1/4"
Gas Connection - LP (in)	3/4"	3/4"	3/4"	3/4"	3/4"	3/4"	3/4"
Vent Outlet Connection (in)	4	4	4	4	6	6	6
Standard Vent Material	PVC/CPVC	PVC/CPVC	PVC/CPVC	PVC/CPVC	PVC/CPVC	PVC/CPVC	PVC/CPVC
Optional Non Metallic Vent Material	SS/PP	SS/PP	SS/PP	SS/PP	SS/PP	SS/PP	SS/PP
Combustion Air Connection	5	5	5	5	5	5	5
Dimensions							
Height (in)	41.13	41.13	41.13	41.13	41.13	41.13	41.13
Width (in)	25.32	25.32	25.32	25.32	25.32	25.32	25.32
Depth (in)	40.50	40.50	40.50	41.94	49.52	52.39	57.14
Operating Weight (lbs.)	407	407	407	426	486	524	607
Shipping Weight (lbs.)	519	519	519	537	598	635	746
Clearance Service/Combustible							
Front (in)	36/6	36/6	36/6	36/6	36/6	36/6	36/6
Rear (in)	24/6	24/6	24/6	24/6	24/6	24/6	24/6
Right Side (in)	1/1	1/1	1/1	1/1	1/1	1/1	1/1
Left Side (in)	1/1	1/1	1/1	1/1	1/1	1/1	1/1
Top (in)	6/6	6/6	6/6	6/6	6/6	6/6	6/6

Provide 24 inch service clearance at either the top or one of the sides.

TORUS® WATERTUBE

Product Specification
WB/WW 1251 - 4000

	1251	1501	1751	2001	2501	3001	4000
Ratings and Capacities							
Input BTU/HR - (WB/WW)	1,250,000	1,500,000	1,750,000	1,999,000	2,500,000	3,000,000	4,000,000
Output BTU/HR - Boiler - (WB)	1,230,000	1,470,000	1,727,250	1,967,016	2,405,000	2,886,000	3,900,000
AHRI Thermal Efficiency - Boiler (%)	98.4	98.0	98.7	98.4	96.2	96.2	97.5
Water Heater Hourly Recovery Capacity (GPH @ 60 deg f)	2488	2977	3396	3880	4937	5870	7843
Water Heater Hourly Recovery Capacity (GPH @ 100 deg f)	1493	1786	2038	2328	2962	3522	4706
Water Heater Hourly Recovery Capacity (GPH @ 140 deg f)	1066	1276	1456	1663	2116	2516	3361
Turn Down NG	10:1	10:1	10:1	10:1	8:1	10:1	9:1
Turn Down LP	6:1	8:1	8:1	8:1	8:1	8:1	9:1
HP - Boiler	36.7	43.9	51.6	58.8	71.9	86.2	116.5
Fuel Type	NG/LP/Dual Fuel	NG/LP/Dual Fuel	NG/LP/Dual Fuel	NG/LP/Dual Fuel	NG/LP/Dual Fuel	NG/LP/Dual Fuel	NG/LP/Dual Fuel
Category	CAT II/IV	CAT II/IV	CAT II/IV	CAT II/IV	CAT II/IV	CAT II/IV	CAT II/IV
Water Volume (gal)	10.5	10.5	16.2	16.2	19.8	19.8	41.3
Design Data - (Max working Press - psig)	160	160	160	160	160	160	160
Min water pressure (psi)	20	20	20	20	20	20	20
ASME Sect IV Fireside Htg Surface (sq-ft)	98.6	98.6	153.2	153.2	188.5	188.5	402.9
ASME Sect IV Waterside Htg Surface (sq-ft)	89.3	89.3	141.9	141.9	175.0	175.0	371.3
Electrical (Standard)	120V-1ph	120V-1ph	230V-1ph	230V-1ph	230V-3ph	230V-3ph	230V-3ph
Electrical (Optional - 3ph)	N/A	N/A	208-575V-3ph	208-575V-3ph	208-575V-3ph	208-575V-3ph	208-575V-3ph
FLA (amps)	12	14	12	12	12	12	19.9
Min. Gas Pressure (w.c.), NG	4	4	4	4	4	4	4
Min. Gas Pressure (w.c.), LP	4	4	4	4	4	4	8
Max. Gas Pressure (w.c.)	14	14	14	14	14	14	14
Max Vent (Equiv. ft)	100	100	100	100	100	100	160
Max Combustion Air (Equiv. ft)	100	100	100	100	100	100	160
Trim							
Number of Relief Valves	1	1	1	1	1	1	1
Relief Valve Pressure Rating (PSI) (WB/WW)	50/125	50/125	50/125	50/125	50/125	50/125	50/125
Inlet Water Connection (in)	2 1/2	2 1/2	2 1/2	2 1/2	3	3	4
Outlet Water Connection (in)	2 1/2	2 1/2	2 1/2	2 1/2	3	3	4
Gas Connection (in), NG	1 1/4	1 1/4	1 1/2	1 1/2	2	2	2
Gas Connection (in), LP	1	1	1 1/4	1 1/4	1 1/2	1 1/2	1 1/2
Vent Outlet Connection (in)	8	8	8	8	10	10	12
Standard Vent Material	SS	SS	SS	SS	SS	SS	SS
Optional Non Metallic Vent Material	PVC/CPVC/PP	PVC/CPVC/PP	PVC/CPVC/PP	PVC/CPVC/PP	PVC/CPVC/PP	PVC/CPVC/PP	PVC/CPVC/PP
Combustion Air Connection	5	8	8	8	8	8	12
Dimensions							
Height (in)	41.16	48.10	54.54	54.54	55.79	55.79	77.84
Width (in)	25.32	33.50	33.50	33.50	33.50	33.50	44.06
Depth (in)	65.54	67.87	72.71	72.71	81.78	81.78	96
Operating Weight (lbs.)	815	980	1285	1285	1565	1565	2866
Shipping Weight (lbs.)	860	1025	1335	1335	1590	1590	2983
Clearance Service/Combustible							
Front (in)	36/6	36/6	36/6	36/6	36/6	36/6	36/6
Rear (in)	24/6	24/6	24/6	24/6	24/6	24/6	24/6
Right Side (in)	1/1	1/1	1/1	1/1	1/1	1/1	24/6
Left Side (in)	1/1	1/1	1/1	1/1	1/1	1/1	24/6
Top (in)	6/6	6/6	6/6	6/6	6/6	6/6	30/6

Provide 24 inch service clearance at either the top or one of the sides, 1251-3001.

RBI® RELIABLE. BOLD. INNOVATIVE.

TORUS® WATERTUBE

Product Specification - Metric
WB/WW 300 - 1000

	300	350	400	500	650	800	1000
Ratings and Capacities							
Input kW - (WB/WW)	87.9	102.3	116.9	146.5	190.5	234.5	292.8
Output kW - Boiler - (WB)	85.3	98.9	112.8	141.3	183.5	225.3	281.1
AHRI Thermal Efficiency - Boiler (%)	97	96.7	96.5	96.4	96.3	96.1	96
Water Heater Hourly Recovery Capacity (LPH @ 33 deg c)	2224	2560	2957	3630	4768	5869	7329
Water Heater Hourly Recovery Capacity (LPH @ 56 deg c)	1334	1536	1774	2178	2861	3521	4397
Water Heater Hourly Recovery Capacity (LPH @ 78 deg c)	953	1097	1267	1556	2044	2515	3141
Turn Down (NG)	8:1	9:1	10:1	10:1	10:1	10:1	10:1
Turn Down (LP)	8:1	8:1	8:1	8:1	8:1	8:1	8:1
HP - Boiler	8.69	10.08	11.50	14.40	18.70	22.97	28.65
Fuel Type	NG/LP/Dual Fuel	NG/LP/Dual Fuel	NG/LP/Dual Fuel	NG/LP/Dual Fuel	NG/LP/Dual Fuel	NG/LP/Dual Fuel	NG/LP/Dual Fuel
Category	CAT II/IV	CAT II/IV	CAT II/IV	CAT II/IV	CAT II/IV	CAT II/IV	CAT II/IV
Water Volume (L)	14.4	14.4	14.4	15.9	21.2	25.0	30.7
Design Data - (Max working Press - psig)	160	160	160	160	160	160	160
Min water pressure (psi)	20	20	20	20	20	20	20
ASME Sect IV Fireside Htg Surface (sq-m)	3.2	3.2	3.2	3.6	4.9	5.7	7.0
ASME Sect IV Waterside Htg Surface (sq-m)	2.9	2.9	2.9	3.3	4.4	5.1	6.3
Electrical (Standard)	120V-1ph	120V-1ph	120V-1ph	120V-1ph	120V-1ph	120V - 1ph	120V - 1ph
FLA (amps)	12	12	12	12	12	12	12
Min. Gas Pressure (w.c.) N/G	4	4	4	4	4	4	4
Min. Gas Pressure (w.c.) LP	4	4	4	4	4	4	4
Max. Gas Pressure (w.c.)	14	14	14	14	14	14	14
Max Vent (Equiv. ft)	100	100	100	100	100	100	100
Max Combustion Air (Equiv. ft)	100	100	100	100	100	100	100
Trim							
Number of Relief Valves	1	1	1	1	1	1	1
Relief Valve Pressure Rating (PSI) (WB/WW)	50/125	50/125	50/125	50/125	50/125	50/125	50/125
Inlet Water Connection (in)	2	2	2	2	2	2	2.5
Outlet Water Connection (in)	2	2	2	2	2	2	2.5
Gas Connection - NG (in)	1"	1"	1"	1"	1-1/4"	1-1/4"	1-1/4"
Gas Connection - LP (in)	3/4"	3/4"	3/4"	3/4"	3/4"	3/4"	3/4"
Vent Outlet Connection (in)	4	4	4	4	6	6	6
Standard Vent Material	PVC/CPVC	PVC/CPVC	PVC/CPVC	PVC/CPVC	PVC/CPVC	PVC/CPVC	PVC/CPVC
Optional Non Metallic Vent Material	SS/PP	SS/PP	SS/PP	SS/PP	SS/PP	SS/PP	SS/PP
Combustion Air Connection (in)	5	5	5	5	5	5	5
Dimensions							
Height (mm)	1045	1045	1045	1045	1045	1045	1045
Width (mm)	643	643	643	643	643	643	643
Depth (mm)	1029	1029	1029	1065	1258	1331	1451
Operating Weight (kg)	185	185	185	193	221	235	275
Shipping Weight (kg)	235	235	235	244	271	288	338
Clearance Service/Combustible							
Front (mm)	914/153	914/153	914/153	914/153	914/153	914/153	914/153
Rear (mm)	610/153	610/153	610/153	610/153	610/153	610/153	610/153
Right Side (mm)	25/25	25/25	25/25	25/25	25/25	25/25	25/25
Left Side (mm)	25/25	25/25	25/25	25/25	25/25	25/25	25/25
Top (mm)	153/153	153/153	153/153	153/153	153/153	153/153	762/153

Provide 610 mm service clearance at either the top or one of the sides.

TORUS® WATERTUBE

Product Specification - Metric
WB/WW 1251 - 4000

	1251	1501	1751	2001	2501	3001	4000
Ratings and Capacities							
Input kW - (WB/WW)	366	440	513	586	733	879	1172
Output kW - Boiler - (WB)	360	430	506	576	705	846	1143
AHRI Thermal Efficiency - Boiler (%)	98.4	98.0	98.7	98.4	96.2	96.2	97.5
Water Heater Hourly Recovery Capacity (LPH @ 33 deg c)	9407	11254	12838	14665	18662	22190	29647
Water Heater Hourly Recovery Capacity (LPH @ 56 deg c)	5644	6752	7703	8799	11197	13341	17788
Water Heater Hourly Recovery Capacity (LPH @ 78 deg c)	4031	4823	5502	6285	7998	9510	12706
Turn Down (NG)	10:1	10:1	10:1	10:1	8:1	10:1	9:1
Turn Down (LP)	6:1	8:1	8:1	8:1	8:1	8:1	9:1
HP - Boiler	36.7	43.9	51.6	58.8	71.9	86.2	116.5
Fuel Type	NG/LP/Dual Fuel	NG/LP/Dual Fuel	NG/LP/Dual Fuel	NG/LP/Dual Fuel	NG/LP/Dual Fuel	NG/LP/Dual Fuel	NG/LP/Dual Fuel
Category	CAT II/IV	CAT II/IV	CAT II/IV	CAT II/IV	CAT II/IV	CAT II/IV	CAT II/IV
Water Volume (L)	39.7	39.7	61.3	61.3	75.0	75.0	156.3
Design Data - (Max working Press - psig)	160	160	160	160	160	160	160
Min water pressure (psi)	20	20	20	20	20	20	20
ASME Sect IV Fireside Htg Surface (sq-m)	9.2	9.2	14.2	14.2	17.5	17.5	37.4
ASME Sect IV Waterside Htg Surface (sq-m)	8.3	8.3	13.2	13.2	16.3	16.3	34.5
Electrical (Standard)	120V-1ph	120V-1ph	230V-1ph	230V-1ph	230V-3ph	230V-3ph	230V-3ph
Electrical (Optional - 3ph)	N/A	N/A	208-575V-3ph	208-575V-3ph	208-575V-3ph	208-575V-3ph	208-575V-3ph
FLA (amps)	12	14	12	12	12	12	19.9
Min. Gas Pressure (w.c.) N/G	4	4	4	4	4	4	4
Min. Gas Pressure (w.c.) LP	4	4	4	4	4	4	8
Max. Gas Pressure (w.c.)	14	14	14	14	14	14	14
Max Vent (Equiv. ft)	100	100	100	100	100	100	160
Max Combustion Air (Equiv. ft)	100	100	100	100	100	100	160
Trim							
Number of Relief Valves	1	1	1	1	1	1	1
Relief Valve Pressure Rating (PSI) (WB/WW)	50/125	50/125	50/125	50/125	50/125	50/125	50/125
Inlet Water Connection (in)	2 1/2	2 1/2	2 1/2	2 1/2	3	3	4
Outlet Water Connection (in)	2 1/2	2 1/2	2 1/2	2 1/2	3	3	4
Gas Connection - NG (in)	1 1/4	1 1/4	1 1/2	1 1/2	2	2	2
Gas Connection - LP (in)	1	1	1 1/4	1 1/4	1 1/2	1 1/2	1 1/2
Vent Outlet Connection (in)	8	8	8	8	10	10	12
Standard Vent Material	SS	SS	SS	SS	SS	SS	SS
Optional Non Metallic Vent Material	PVC/CPVC/PP	PVC/CPVC/PP	PVC/CPVC/PP	PVC/CPVC/PP	PVC/CPVC/PP	PVC/CPVC/PP	PVC/CPVC/PP
Combustion Air Connection (in)	5	8	8	8	8	8	12
Dimensions							
Height (mm)	1045	1222	1385	1385	1417	1417	1977
Width (mm)	643	851	851	851	851	851	1119
Depth (mm)	1665	1724	1847	1847	2077	2077	2500
Operating Weight (kg)	370	445	583	583	710	710	1300
Shipping Weight (kg)	390	465	605	605	721	721	1353
Clearance Service/Combustible							
Front (mm)	914/153	914/153	914/153	914/153	914/153	914/153	914/153
Rear (mm)	610/153	610/153	610/153	610/153	610/153	610/153	610/153
Right Side (mm)	25/25	25/25	25/25	25/25	25/25	25/25	610/153
Left Side (mm)	25/25	25/25	25/25	25/25	25/25	25/25	610/153
Top (mm)	153/153	153/153	153/153	153/153	153/153	153/153	762/153

Provide 610 mm service clearance at either the top or one of the sides, 1251-3001.

RBI® RELIABLE. BOLD. INNOVATIVE.

RELIABLE. BOLD. INNOVATIVE.

260 North Elm Street, Westfield, MA 01085
Tel. (833) 265-5371
7555 Tranmere Drive, Mississauga, Ontario L5S 1L4
Tel. (905) 670-5888
www.rbiwaterheaters.com

A MESTEK COMPANY